AQUABRASS

otto 53N16

widespread lavatory faucet

FEATURES

Solid brass construction
Crystal clear water flow
Press pop-up drain with overflow included #ABDR00699
Ceramic cartridges
1/2″ connection

FINISHES

Standard
Polished chrome (pc)
Brushed nickel (bn)
Custom
15 custom finishes available
(ask your local Aquabrass authorized dealer for details)

WARRANTY

Residential: Limited lifetime warranty to original purchaser
Commercial: Two years warranty
(Complete warranty available at www.aquabrass.com/warranty)

SPECS AT LARGE

Overall spout projection: 6″
CC spout projection: 4 9/16″
Total faucet height: 7 1/16″
Flow rate faucet: 2.2 gpm
Mounting hole: 1 3/8″
Counter depth: 1 1/2″

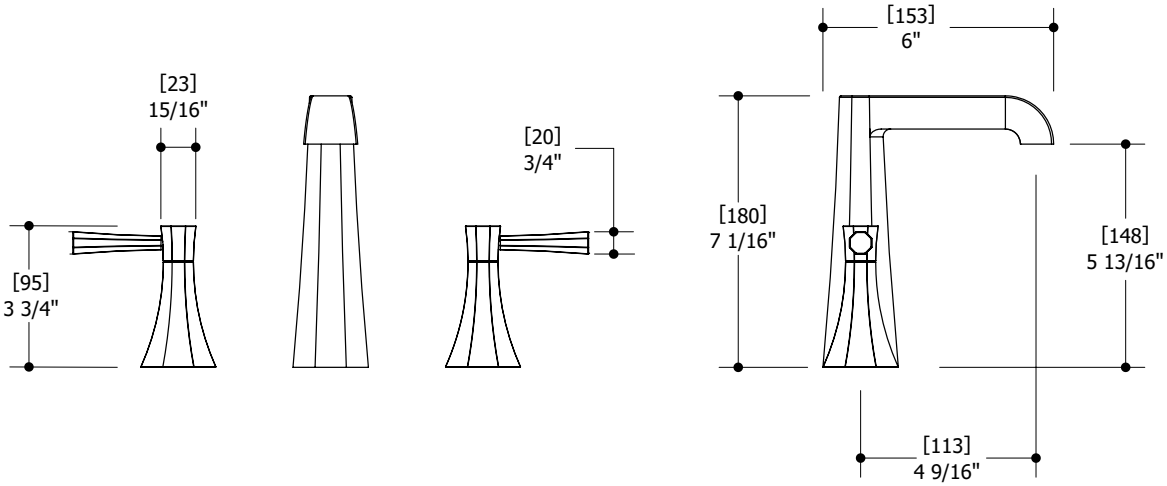

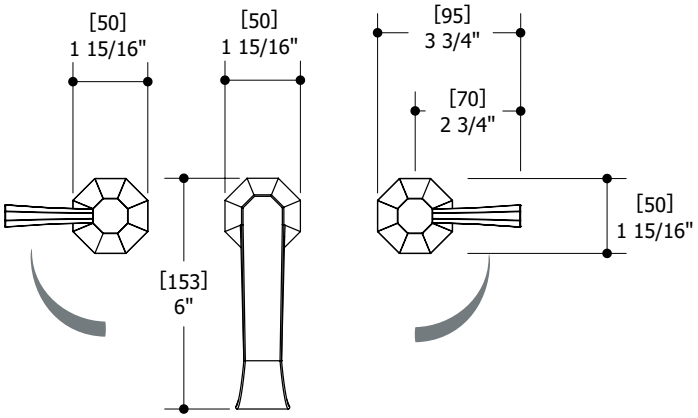

Aquabrass cannot be held responsible for any technical or typographical errors or omissions contained within this document and reserves the right to make changes without prior notice.