SIGMA
PRECISION CRAFTED

Specifications

Series 800

1.808108
Houston
Widespread Lavatory Set

FEATURES:

- All brass construction. Flexible hoses designed to be installed on 8” to 16” centers. Includes pop-up style drain assembly.
- Lever style handles with setscrew attachment.
- 1/4-turn ceramic disc valve cartridge.
- Available in all finishes. Warranty varies according to finish selection.
- Standard aerator is limited to 1.2 gpm.
- Certified to meet or exceed the following codes and standards: ASME A112.18.1/CSAB 125.1-2012

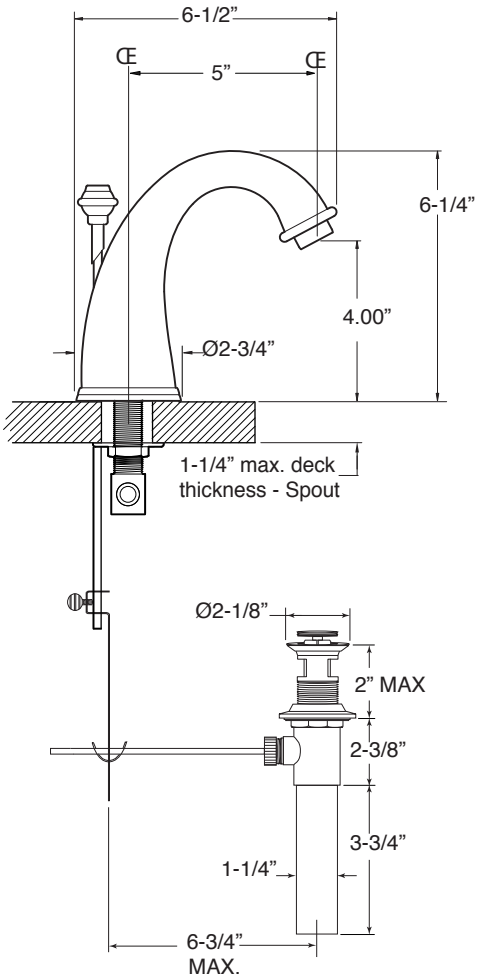

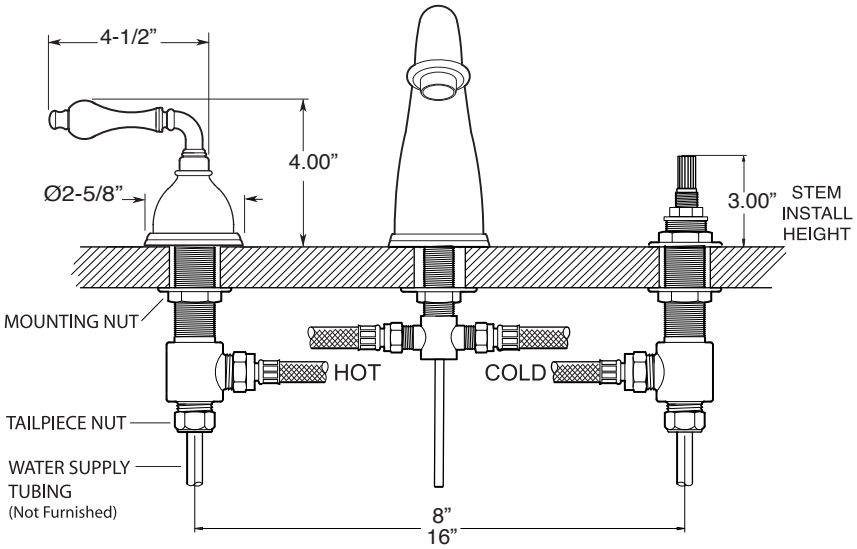

NOTE: Spout and valves install through 1-1/4” diameter holes

Note: Measurements are subject to change or cancellation. No responsibility is assumed for use of superseded or voided pages.